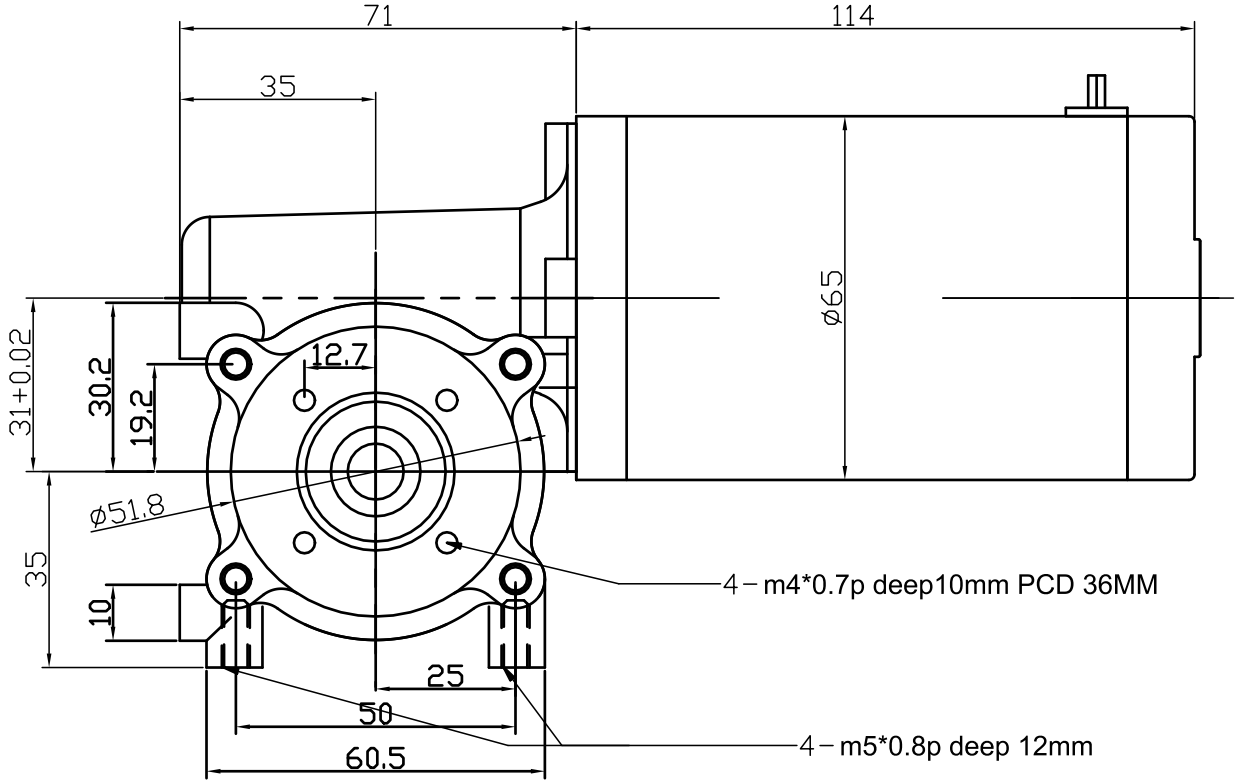
71
114
35
ø65
31+0.02
30.2
19.2
12.7
ø51.8
35
10
4－m4*0.7p deep10mm PCD 36MM
25
50
60.5
4－m5*0.8p deep 12mm

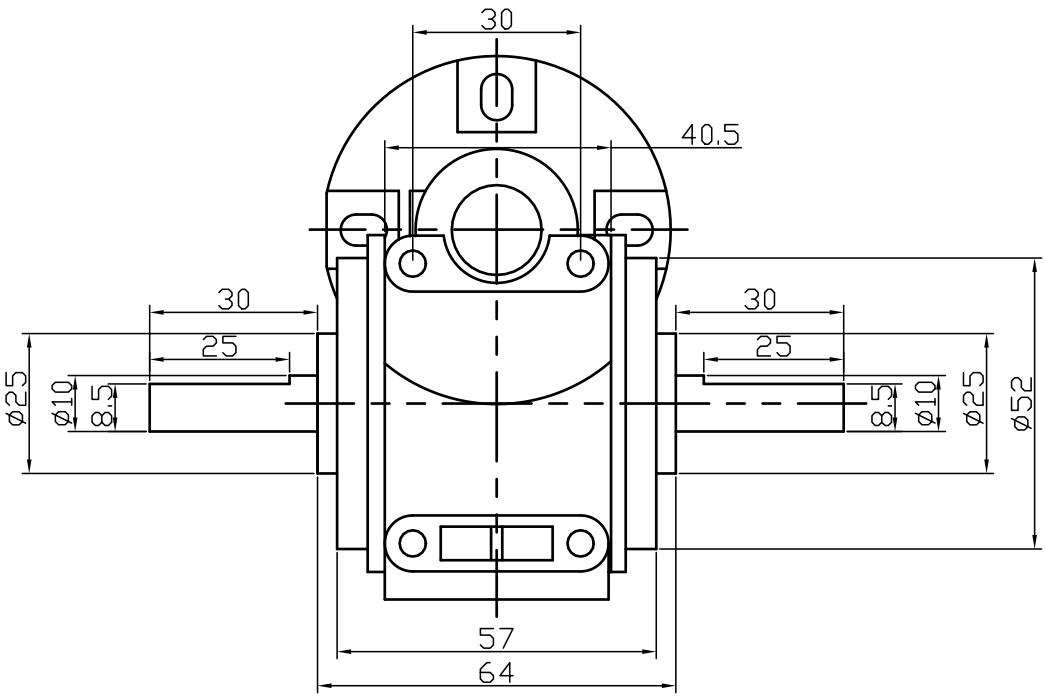
30
40.5
30
25
ø25
ø10
8.5
30
25
8.5
ø10
ø25
ø52
57
64